Tube Technologies Inc.
1555 Consumer Circle
Corona, CA 92880
(951) 371-4878
www.ttiexhaust.com

1970-1974 E-body Barracuda Exhaust System

- 2.5òsystem ï part # XE25HN-CU
- 3.0òsystem ï part # XE30HN-CU

MUFFLERS
Opting to use mufflers other than Dynomax Super Turbos may require modification to the muffler slips, (cutting & welding) for proper fit and alignment due to the muffler case length and width differences.

System designed using Dynomax Super Turbo mufflers
- 2.5ò- Overall length 18.5ò/ Part # 17733
- 3.0ò- Overall length 23ò/ Part # 17793

O.E. STYLE TAILPIPE HANGER RECEPTACLES
Included with Tailpipes.
- Includes Hardware
- Part # TPH-E2530

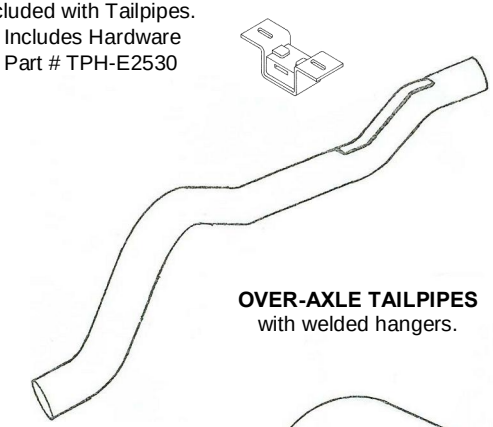

OVER-AXLE TAILPIPES
with welded hangers.

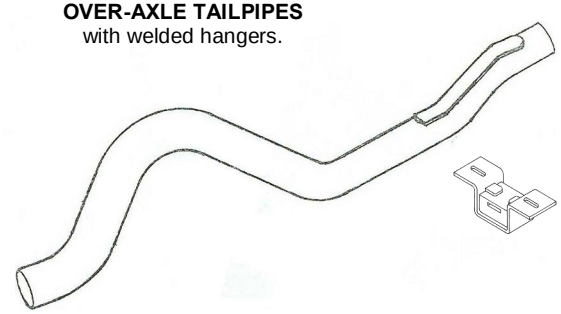

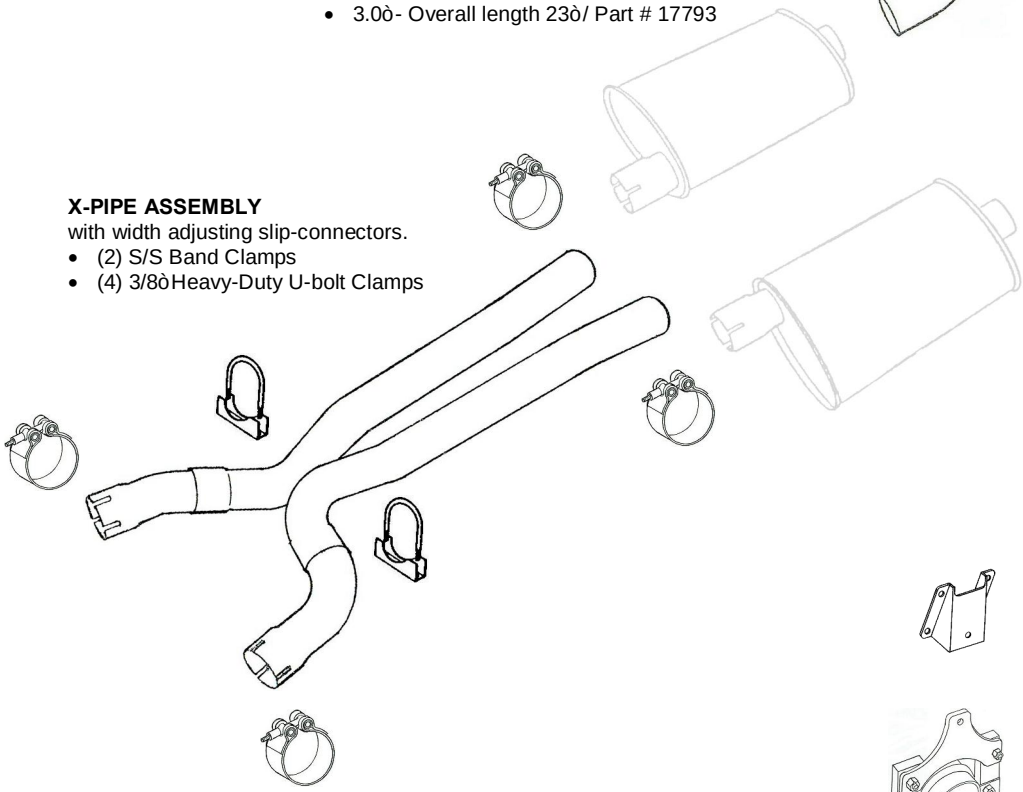

X-PIPE ASSEMBLY
with width adjusting slip-connectors.
- (2) S/S Band Clamps
- (4) 3/8òHeavy-Duty U-bolt Clamps

MUFFLER BODY BRACKETS
If your application is not equipped with Muffler Body Brackets, a set will be required.

- Sold separately - Part # E2530BB-2

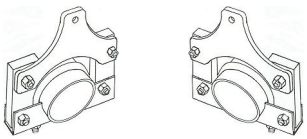

Passenger-side Driver-side

MUFFLER HANGERS
Included with system.
- 2.5òPart # MH-E25HA
- 3.0òPart # MH-E30HA